PNA Cable glands for unarmoured cables

Installation: hazardous areas - Zone 1 / 2 (Gases) - Zone 21 / 22 (Dusts)
Classification: Group II - Category 2G 2D

REFERENCE STANDARDS

	Directive 94/9/EC (until April 19th, 2016) and Directive 2014/34/EU (from April 20th, 2016)
EXECUTION	Ⓔx II 2 G Ex d / Exe / Exia IIC Gb Ⓔx II 2 D Ex tb IIIC Db
RULES OF COMPLIANCE	EN/IEC 60079-0; EN/IEC 60079-1; EN/IEC 60079-7; EN/IEC 60079-31
EC Type-Examination Certificate	INERIS 09 ATEX 0028X
PROTECTION DEGREE	IP66 or IP66/68
AMBIENT TEMPERATURE	-40°C ÷ +90°C (Rubber rings EPDM-60) -60°C ÷ +180°C (Rubber rings SILICON)
OTHER AVAILABLE CERTIFICATES	IECEx: IECEx INE 11.0017X
	INMETRO: CEPEL 12.2175X
	EAC: TC RU C-IT.ГБ08.B 01624 (-75°C ÷ +180°C)
	RINA: ELE18111CS_016
	RUSSIAN MARINE CERTIFICATE (RMRS): 13.03518.315
	Kc (Korean certification):14-KB4B0-0455X

Mechanical characteristics

Body / cap	OT-58 marine brass (ON) - AISI-316L stainless steel (IX)
Finishes	full nickel plating threatment (brass material only)
Rubber rings	EPDM rubber- 50-60 shore hardness - Silicon rubber - 60 shore hardness
O-ring	silicon rubber - 60 shore hardness
Skid washer	nylon 6.0
Chamber for sealing	OT-58 marine brass ("R" version only)

Applications

- For unarmoured cables only
- Single compression type suitable for indoor and outdoor use
- Single compression - on cable (inner sealing)
- Sealing with proper resin into "chamber of sealing" (on barrier type version "R" only)

On Request Accessories:

- Locknuts, Gaskets, PVC Shrouds, Earthing Tags, Sealing (See DL-NW-PTD-ET bulletin)

comm@antideflagrantigce.com

PNA Cable gland selection table

CODE (1)	SIZE	ENTRY THREAD SIZE METRIC	(2)	NPT	(2)	UNI ISO 228	(2)	INNER SHEATH DIA. min [mm]	max [mm]	HEXAGON [mm]	MATERIAL	(3)
PNA# PNA-R#	00*	ISO-M20	M	1/2"NPT	N	1/2"	G	4,0	7,0	24,0	NICKEL PL.BRASS	ON
								7,0	10,0		STAINLESS STEEL	IX
PNA# PNA-R#	01	ISO-M20	M	1/2"NPT	N	1/2"	G	5,5	8,0	32,0	NICKEL PL.BRASS	ON
								8,0	10,5		STAINLESS STEEL	IX
								10,5	13,0			
PNA# PNA-R#	02	ISO-M25	M	3/4"NPT	N	3/4"	G	10,5	13,0	36,0	NICKEL PL.BRASS	ON
								13,0	15,5		STAINLESS STEEL	IX
								15,5	18,0			
PNA# PNA-R#	03	ISO-M32	M	1"NPT	N	1"	G	15,0	18,0	45,0	NICKEL PL.BRASS	ON
								18,0	21,0		STAINLESS STEEL	IX
								21,0	24,0			
PNA# PNA-R#	04	ISO-M40	M	1 1/4"NPT	N	1 1/4"	G	21,0	24,0	53,0	NICKEL PL.BRASS	ON
								24,0	27,0		STAINLESS STEEL	IX
								27,0	30,0			
PNA# PNA-R#	05	ISO-M50	M	1 1/2"NPT	N	1 1/2"	G	24,0	27,0	61,0	NICKEL PL.BRASS	ON
								27,0	30,0		STAINLESS STEEL	IX
								30,0	33,0			
								33,0	36,0			
PNA# PNA-R#	06	ISO-M63	M	2"NPT	N	2"	G	36,0	39,0	71,0	NICKEL PL.BRASS	ON
								39,0	42,0		STAINLESS STEEL	IX
								42,0	45,0			
PNA# PNA-R#	07	ISO-M75	M	2 1/2"NPT	N	2 1/2"	G	42,0	45,0	84,0	NICKEL PL.BRASS	ON
								45,0	48,0		STAINLESS STEEL	IX
								48,0	51,0			
								51,0	54,0			
PNA# PNA-R#	08	ISO-M90	M	3"NPT	N	3"	G	52,0	56,0	101,0	NICKEL PL.BRASS	ON
								56,0	59,0		STAINLESS STEEL	IX
								59,0	62,0			
								62,0	65,0			
								65,0	68,0			
PNA# PNA-R#	09	ISO-M100	M	4"NPT	N	4"	G	68,0	74,0	126,0	NICKEL PL.BRASS	ON
								74,0	80,0		STAINLESS STEEL	IX
								80,0	86,0			
								86,0	92,0			

***NOTE:** 00 SIZE WITH **ISO-M16 OR 3/8''NPT - 3/8''ISO-228** BODY, ON REQUEST

CABLE GLAND ORDERING EXAMPLES

PNA#	01	M	ON	= **PNA#01MON** (NON-BARRIER CABLE GLAND NICKEL PLATED BRASS ISO-M20 THR.)
PNA#	03	N	IX	= **PNA#03NIX** (NON-BARRIER CABLE GLAND STAINLESS STEEL 1/2"NPT THR.)

LEGEND

(1)	CABLE GLAND TYPE/MODEL	**PNA#** = NON-BARRIER CABLE GLAND - **PNA-R#** = BARRIER CABLE GLAND
(2)	THREADING	**M** = ISO METRIC pitch 1,5mm - **N** = NPT (ANSI/ASME B1.20.1) - **G** = UNI ISO-228
(3)	CABLE GLAND MATERIAL	**ON** = NICKEL PLATED MARINE BRASS - **IX** = AISI-316L STAINLESS STEEL

PNA DIMENSIONAL

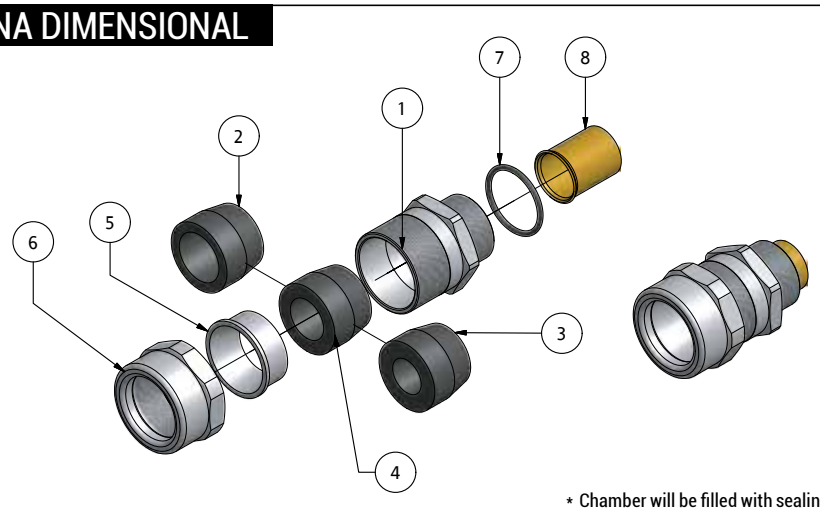

1	BODY
2-3-4	INNER SEALING RING FOR NOT ARMOURED CABLE
5	ARMOUR CLAMPING CONE
6	GLAND NUT
7	O-RING (ONLY FOR METRICAL)
8	*CHAMBER FOR SEALING ("R" VERSION ONLY)

* Chamber will be filled with sealing when cable gland is completely assembled.

REMARK:
Due to the development of the national and international specifications and of the technology, the above technical characteristics showed on this bulletin can be considered as binding on our confirmation only.

comm@antideflagrantigce.com

PNAF Cable glands for unarmoured cables

Installation: hazardous areas - Zone 1 / 2 (Gases) - Zone 21 / 22 (Dusts)
Classification: Group II - Category 2G 2D

REFERENCE STANDARDS

	Directive 94/9/EC (until April 19th, 2016) and Directive 2014/34/EU (from April 20th, 2016)
EXECUTION	Ⓔx II 2 G Ex d / Exe / Exia IIC Gb Ⓔx II 2 D Ex tb IIIC Db
RULES OF COMPLIANCE	EN/IEC 60079-0; EN/IEC 60079-1; EN/IEC 60079-7; EN/IEC 60079-31
EC Type-Examination Certificate	INERIS 09 ATEX 0028X
PROTECTION DEGREE	IP66 or IP66/68
AMBIENT TEMPERATURE	-40°C ÷ +90°C (Rubber rings EPDM-60) -60°C ÷ +180°C (Rubber rings SILICON)
OTHER AVAILABLE CERTIFICATES	IECEx: IECEx INE 11.0017X
	INMETRO: CEPEL 12.2175X
	EAC: TC RU C-IT.ГБ08.B 01624 (-75°C ÷ +180°C)
	RINA: ELE18111CS_016
	RUSSIAN MARINE CERTIFICATE (RMRS): 13.03518.315
	Kc (Korean certification):14-KB4B0-0455X

Mechanical characteristics

Body / cap	OT-58 marine brass (ON) - AISI-316L stainless steel (IX)
Finishes	full nickel plating threatment (brass material only)
Rubber rings	EPDM rubber- 50-60 shore hardness - Silicon rubber - 60 shore hardness
O-ring	silicon rubber - 60 shore hardness
Skid washer	nylon 6.0
Chamber for sealing	OT-58 marine brass ("R" version only)

Applications

For unarmoured cables only

Suitable for flexible conduit coupling connection by threaded cap (uni iso 228)

Single compression type suitable for indoor and outdoor use

Single compression - on cable (inner sealing)

Sealing with proper resin into "chamber of sealing" (on barrier type version "R" only)

On Request Accessories:

• Locknuts, Gaskets, PVC Shrouds, Earthing Tags, Sealing (See DL-NW-PTD-ET bulletin)

PNAF Cable gland selection table

CODE (1)	SIZE	ENTRY THREAD SIZE: METRIC (2)		NPT (2)		UNI ISO 228 (2)		INNER SHEATH DIA min [mm]	INNER SHEATH DIA max [mm]	FEMALE THREAD UNI ISO 228 (4)	EXAG. [mm]	MATERIAL	(3)
PNAF# PNAF-R#	01	ISO-M20	M	1/2"NPT	N	1/2"	G	5,5	8,0	1/2"	32,0	NICKEL PL.BRASS	ON
								8,0	10,5			STAINLESS STEEL	IX
								10,5	13,0				
PNAF# PNAF-R#	02	ISO-M25	M	3/4"NPT	N	3/4"	G	10,5	13,0	3/4"	36,0	NICKEL PL.BRASS	ON
								13,0	15,5			STAINLESS STEEL	IX
								15,5	18,0				
PNAF# PNAF-R#	03	ISO-M32	M	1"NPT	N	1"	G	15,0	18,0	1"	45,0	NICKEL PL.BRASS	ON
								18,0	21,0			STAINLESS STEEL	IX
								21,0	24,0				
PNAF# PNAF-R#	04	ISO-M40	M	1 1/4"NPT	N	1 1/4"	G	21,0	24,0	1 1/4"	53,0	NICKEL PL.BRASS	ON
								24,0	27,0			STAINLESS STEEL	IX
								27,0	30,0				
PNAF# PNAF-R#	05	ISO-M50	M	1 1/2"NPT	N	1 1/2"	G	24,0	27,0	1 1/2"	61,0	NICKEL PL.BRASS	ON
								27,0	30,0			STAINLESS STEEL	IX
								30,0	33,0				
								33,0	36,0				
PNAF# PNAF-R#	06	ISO-M63	M	2"NPT	N	2"	G	36,0	39,0	2"	71,0	NICKEL PL.BRASS	ON
								39,0	42,0			STAINLESS STEEL	IX
								42,0	45,0				
PNAF# PNAF-R#	07	ISO-M75	M	2 1/2"NPT	N	2 1/2"	G	42,0	45,0	2 1/2"	84,0	NICKEL PL.BRASS	ON
								45,0	48,0			STAINLESS STEEL	IX
								48,0	51,0				
								51,0	54,0				
PNAF# PNAF-R#	08	ISO-M90	M	3"NPT	N	3"	G	52,0	56,0	3"	101,0	NICKEL PL.BRASS	ON
								56,0	59,0			STAINLESS STEEL	IX
								59,0	62,0				
								62,0	65,0				
								65,0	68,0				
PNAF# PNAF-R#	09	ISO-M100	M	4"NPT	N	4"	G	68,0	74,0	4"	126,0	NICKEL PL.BRASS	ON
								74,0	80,0			STAINLESS STEEL	IX
								80,0	86,0				
								86,0	92,0				

***NOTE:** 00 SIZE WITH **ISO-M16 OR 3/8''NPT - 3/8''ISO-228** BODY, ON REQUEST

CABLE GLAND ORDERING EXAMPLES

PNAF#	01	M	ON	= **PNAF#01MON** (NON-BARRIER CABLE GLAND NICKEL PLATED BRASS ISO-M20 THR.)
PNAF#	03	N	IX	= **PNAF#03NIX** (NON-BARRIER CABLE GLAND STAINLESS STEEL 1/2"NPT THR.)

LEGENDA

(1)	CABLE GLAND TYPE/MODEL	**PNAF#** = NON-BARRIER CABLE GLAND - **PNAF-R#** = BARRIER CABLE GLAND
(2)	THREADING	**M** = ISO METRIC pitch 1,5mm - **N** = NPT (ANSI/ASME B1.20.1) - **G** = UNI ISO-228
(3)	CABLE GLAND MATERIAL	**ON** = NICKEL PLATED MARINE BRASS - **IX** = AISI-316L STAINLESS STEEL
(4)	FEMALE THREAD	UNI ISO-228 FEMALE THREAD SUITABLE FOR FLEXIBLE CONDUIT COUPLING

PNAF DIMENSIONAL

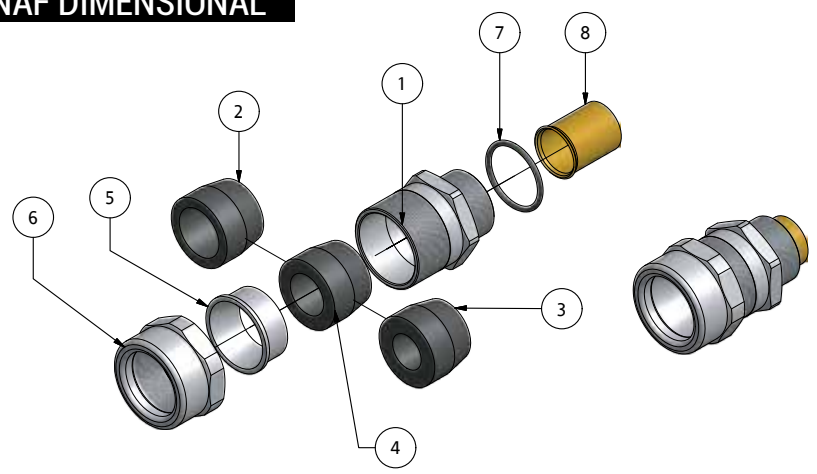

1	BODY
2-3-4	INNER SEALING RING FOR NOT ARMOURED CABLE
5	ARMOUR CLAMPING CONE
6	GLAND NUT "FEMALE"
7	O-RING (ONLY FOR METRICAL)
8	*CHAMBER FOR SEALING ("R" VERSION ONLY)

* Chamber will be filled with sealing when cable gland is completely assembled.

REMARK:
Due to the development of the national and international specifications and of the technology, the above technical characteristics showed on this bulletin can be considered as binding on our confirmation only.

comm@antideflagrantigce.com

DL-NW-PTD-ET

Cable glands accesories

IInstallation: hazardous areas - Zone 1 / 2 (Gases) - Zone 21 / 22 (Dusts)
Classification: Group II - Category 2G 2D

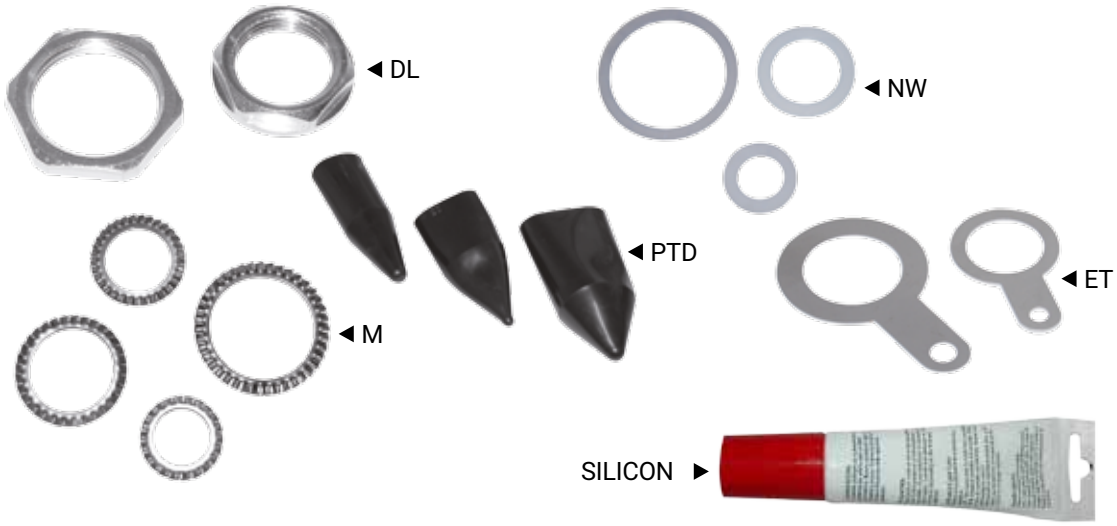

Mechanical characteristics

LOCKNUTS	
Material	nichel plated brass
Finishes	full nickel plating threatment (brass material only)

SHORUDS	
Material	PVC

GASKETS	
Material	nylon 6.0

EARTH TAGS	
Material	stainless steel

Applications

Locknuts	Are preffered items used in securing cable glands to the gland plate especially to plastic junction boxes
Shoruds	For all tipe of glands application where additional protection is required
Silicone sealant	Is provided for submission of barrier cable glands type-R
Gaskets	Are used to mantain the ip rating across the interface between the equipment and relevant cable gland
Earth tags	Are used to ensure earth continuity and grounding of cable armour

comm@antideflagrantigce.com

DL-NW-PTD-ET
Cable glands accessories

Technical Features

LOCKNUTS			
DETAIL A	THREADS / SIZE		
TYPE	NPT	UNI-228	ISO
DL0	3/8"	3/8"	M16
DL1	1/2"	1/2"	M20
DL2	3/4"	3/4"	M25
DL3	1"	1"	M32
DL4	1-1/4"	1-1/4"	M40
DL5	1-1/2"	1-1/2"	M50
DL6	2"	2"	M63
DL7	2-1/2"	2-1/2"	M75
DL8	3"	3"	M90
DL9	4"	4"	M100

GASKETS			
DETAIL B	THREADS / SIZE		
TYPE	NPT	UNI-228	ISO
NW0	3/8"	3/8"	M16
NW1	1/2"	1/2"	M20
NW2	3/4"	3/4"	M25
NW3	1"	1"	M32
NW4	1-1/4"	1-1/4"	M40
NW5	1-1/2"	1-1/2"	M50
NW6	2"	2"	M63
NW7	2-1/2"	2-1/2"	M75
NW8	3"	3"	M90
NW9	4"	4"	M100

WASHERS		
TYPE	ØD [mm]	DETAIL
M20	20	C
M25	25	C
M32	32	C
M40	40	C
M50	50	C
M63	63	C

DL Det.A

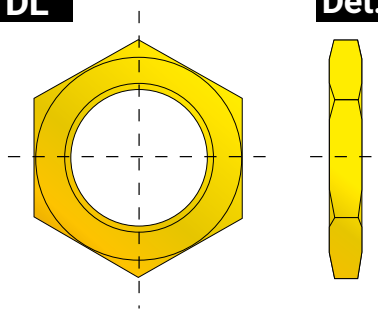

NW Det.B

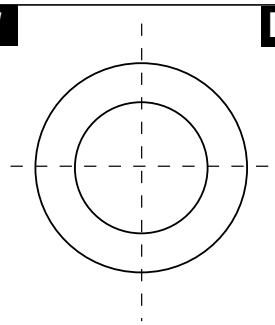

M Det.C

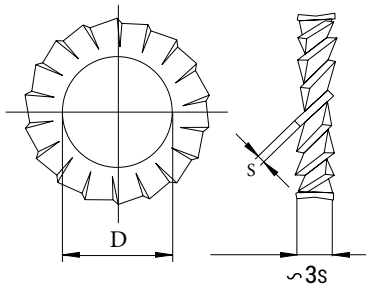

SHROUDS			
DETAIL D	THREADS / SIZE		
TYPE	NPT	UNI-228	ISO
PTD0	3/8"	3/8"	M16
PTD1	1/2"	1/2"	M20
PTD2	3/4"	3/4"	M25
PTD3	1"	1"	M32
PTD4	1-1/4"	1-1/4"	M40
PTD5	1-1/2"	1-1/2"	M50
PTD6	2"	2"	M63
PTD7	2-1/2"	2-1/2"	M75
PTD8	3"	3"	M90
PTD9	4"	4"	M100

EARTHS TAGS			
DETAIL E	THREADS / SIZEE		
TYPE	NPT	UNI-228	ISO
ET0	3/8"	3/8"	M16
ET1	1/2"	1/2"	M20
ET2	3/4"	3/4"	M25
ET3	1"	1"	M32
ET4	1-1/4"	1-1/4"	M40
ET5	1-1/2"	1-1/2"	M50
ET6	2"	2"	M63
ET7	2-1/2"	2-1/2"	M75
ET8	3"	3"	M90
ET9	4"	4"	M100

SILICON SEALANT	
CABLE GLANDS SIZE	Q.TY SEALING [ml]
0	2
1	3
2	6
3	15
4	20
5	30
6	50
7	100
8	150
9	160

PTD Det.D

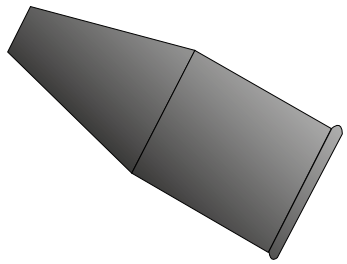

ET Det.E

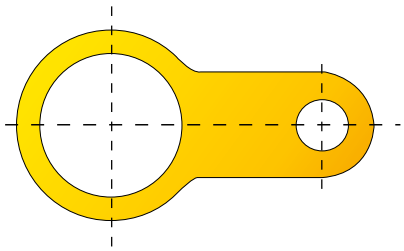

SEALING

TUBE (80ML) - COD. 20303.0094

REMARK:
Due to the development of the national and international specifications and of the technology, the above technical characteristics showed on this bulletin can be considered as binding on our confirmation only.

comm@antideflagrantigce.com